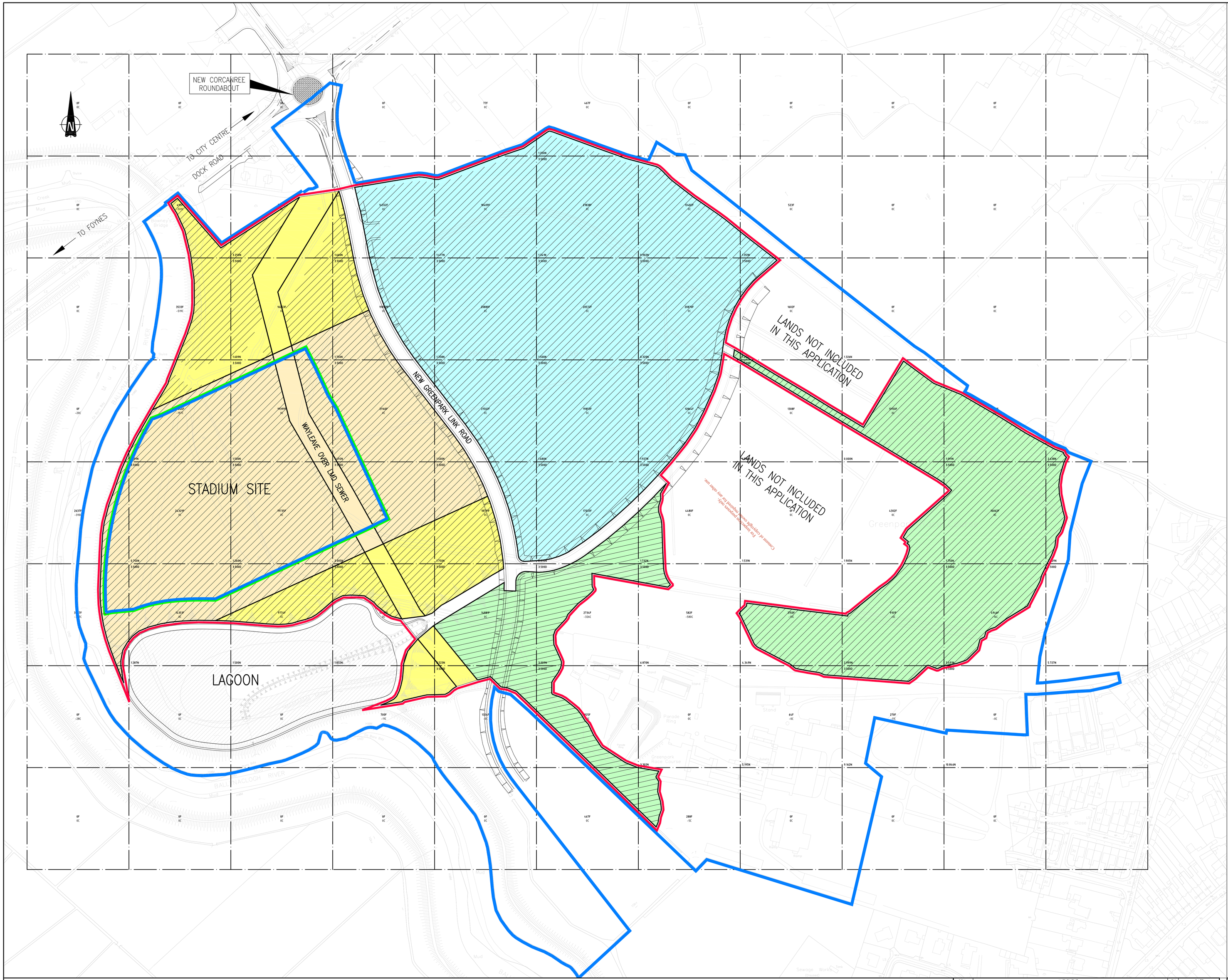

NOTES

1. SITE AREA = 28.967 Hectares (71.579 Acres)
2. SURVEY INFORMATION TAKEN FROM GERRY DORE SURVEY DATED 26-9-96 AND ADDITIONAL GERRY DORE SURVEY DATED 28-11-97
3. INTERNAL LAND DRAINS TO BE FILLED WITH APPROVED FILL MATERIAL

LEGEND

- SITE BOUNDARY
- LIMERICK RACE COMPANY PLC. PROPERTY BOUNDARY
- BORD NA gCON PROPERTY BOUNDARY
- LANDS TO BE FILLED TO LEVEL 3.50m MOD

GRID INFORMATION

GRID SIZE = 100m x 100m

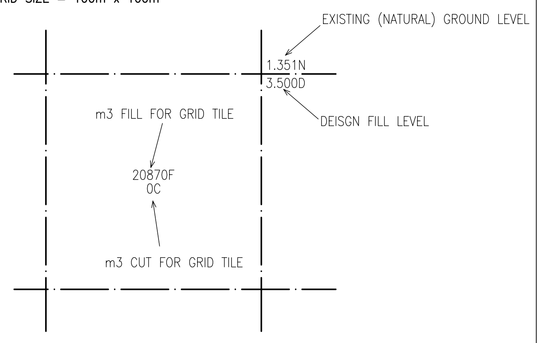

FILL PHASING

- PHASE 1 SHOWN THUS
- PHASE 2 SHOWN THUS
- PHASE 3 SHOWN THUS
- PHASE 4 SHOWN THUS

©Michael Punch & Partners Ltd.
This drawing and any design thereon is the copyright of the Consultants and must not be reproduced without their written consent. All drawings remain the property of the Consultants.

Figured dimension only to be taken from this drawing. All dimensions to be checked on site. Consultants to be informed immediately of any discrepancies before work proceeds.

Ordnance Survey Ireland Licence No EN 0003709
© Ordnance Survey Ireland and Government of Ireland

REFERENCED OS MAPS	
4742-10	4743-06
4742-15	4743-11
4742-20	4743-16

REV.	AMENDMENT	BY	DATE

Job: WASTE LICENCE APPLICATION – GREENPARK

Title: FILL QUANTITIES / PHASING

Michael Punch & Partners
CONSULTING ENGINEERS
• 97 Henry Street, Limerick. T: 061 313 877, F: 061 319 071, E: limerick@mpp.ie W: www.mpp.ie
• 2nd Floor, Carnegie House, Library Road, Dun Laoghaire, Co. Dublin. T: 01 235 2300, F: 01 235 2985, E: dublin@mpp.ie
• Unit 1B, University Technology Centre, Curraheen Road, Bishopstown, Cork. T: 021 438 6100, F: 021 438 6101, E: cork@mpp.ie

Tech. Check: P.J. Mulcahy
Eng. Check: Donal Gallery
Approved: Sinead Kennedy

Stage: Planning
Scale @A0: 1:1250
Drawn: P.J. Mulcahy
Date: 2009-02-10
Drawing No: 091-140-010
Rev: P0